DTMH3100D

NHP DIN-T Miniature Circuit Breaker 10H 3Pole 100A D Curve

DIN-T™ MINIATURE CIRCUIT BREAKERS

Component type	Miniature circuit breaker (MCB)
Range	DIN-T MCB
Model	N/A
Product status	Existing

NHP DIN-T Miniature Circuit Breakers (MCBs) are high-performance electrical protection devices offering a comprehensive range of features to meet the needs of any project. These MCBs are available in short circuit ratings of 6kA and 10kA with current ratings from 0.5A through to 125A in variety of B, C or D trip curves. These MCBs are available in 1P, 2P, 3P and 4P housings.

ELECTRICAL	Rated current	100 A
	Number of poles (total)	3
	Trip curve	D
	Rated voltage	415 V
	Frequency	50-60 Hz
	Voltage type	AC/DC
	Rated ultimate short-circuit breaking capacity, Icu 125V DC	30 kA
	Service voltage Ub, AC	12 V
	Service voltage Ub, DC	12 V
	Nominal operating voltage Un, DC	375 V
	Rated short-circuit breaking capacity Icu according to AS/NZS 60947-2 at 230 VAC	50 kA
	Rated short-circuit breaking capacity Icu according to AS/NZS 60947-2 at 400 VAC	50 kA
	Max. rated operation voltage Ue	690 V
	Rated insulation voltage Ui	440 V
	Rated impulse withstand voltage Uimp	6 kV
CONSTRUCTION	Number of protected poles	3
	IP rating	IP40
MECHANICAL	Connectable conductor cross section solid-core	1-70 mm²
	Connectable conductor cross section multi-wired	1-50 mm²
DIMENSIONS	Height	100 mm
	Width	81 mm
	Depth	90 mm
	Width in number of modular spacings	3

DTMH3100D

NHP DIN-T Miniature Circuit Breaker 10H 3Pole 100A D Curve

DIN-T™ MINIATURE CIRCUIT BREAKERS

DIMENSIONS	Weight	0.74 kg
ENVIRONMENT	Pollution degree	3
	Rated surrounding temperature without derating	30 °C
	Rated temperature	-25…60 °C

DTMH3100D

NHP DIN-T Miniature Circuit Breaker 10H 3Pole 100A D Curve

DIN-T™ MINIATURE CIRCUIT BREAKERS

CIRCUIT DIAGRAM

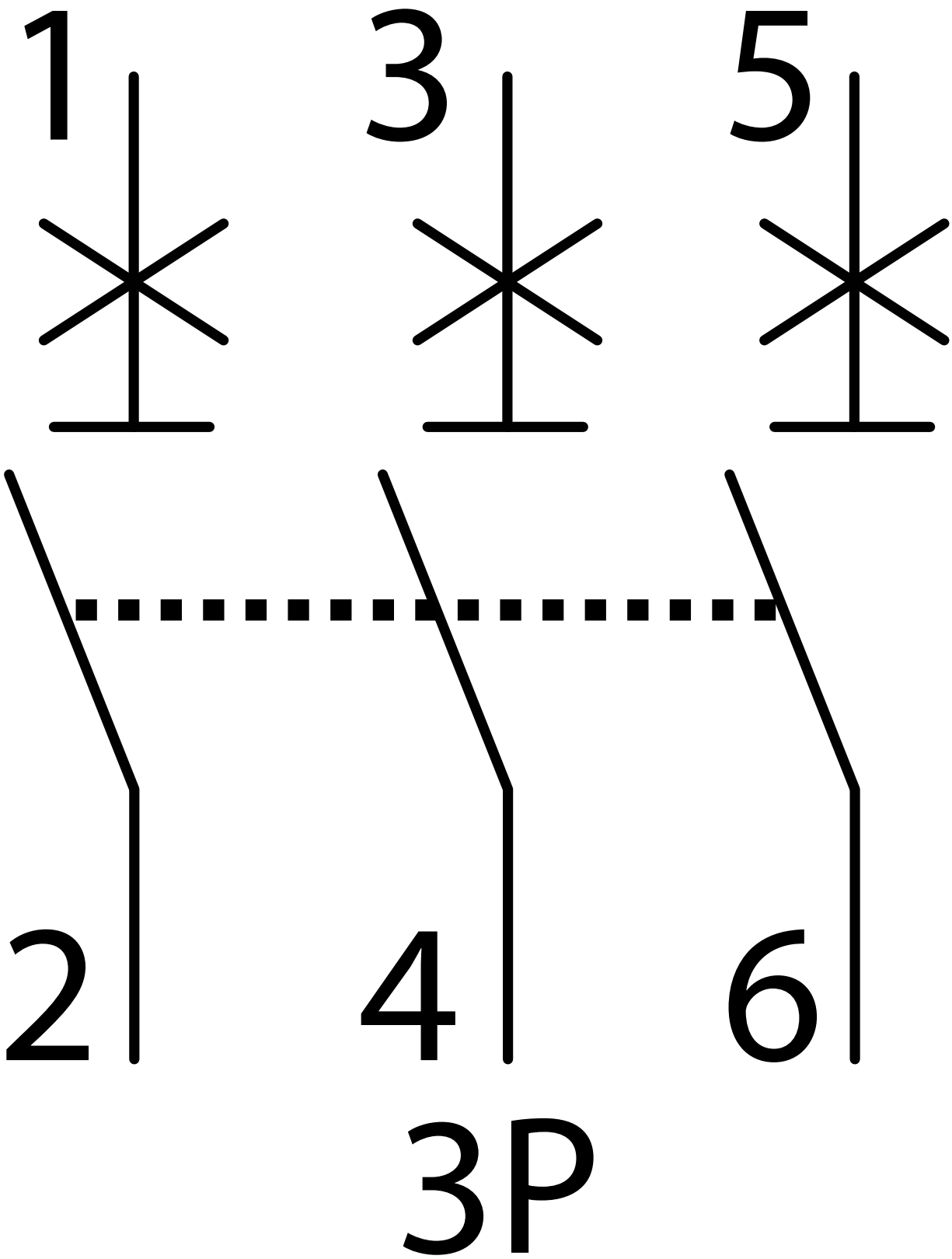

Published on 16 September 2026

DTMH3100D

NHP DIN-T Miniature Circuit Breaker 10H 3Pole 100A D Curve

NHP DIN-T™ MINIATURE CIRCUIT BREAKERS

DIMENSIONAL DIAGRAM

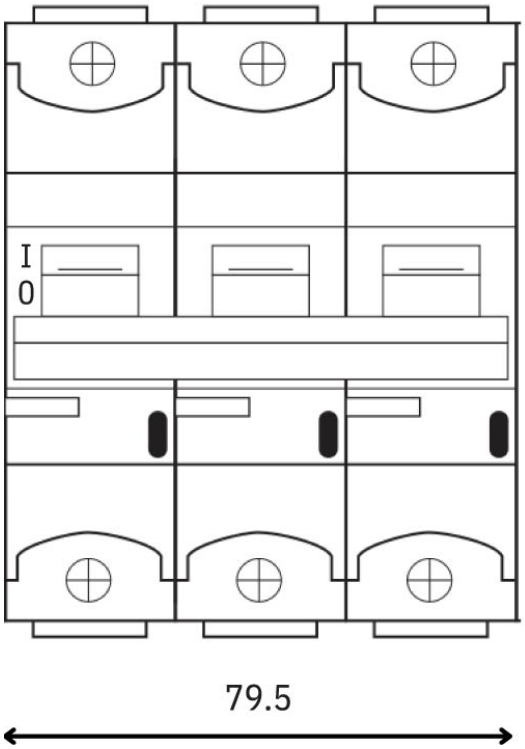

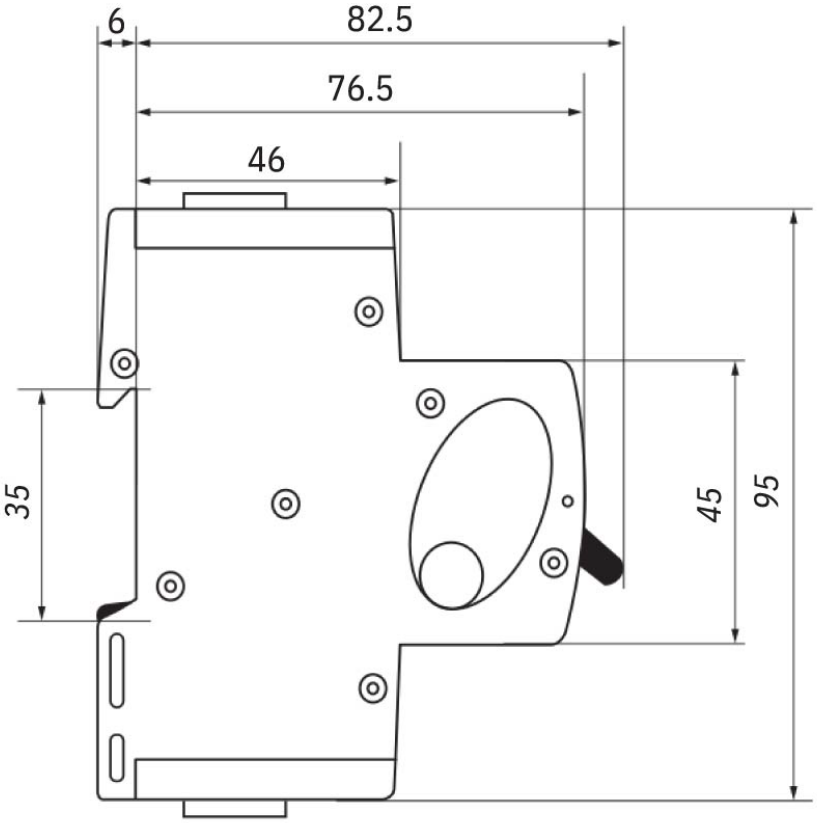

RELATED PRODUCTS

ACCESSORY

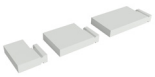

Item No: DTALBAX
Required: No
Description: NHP DIN-T LOCKDIN Auxliary Filler 9mm, 18mm, 27mm Pack Qty 10 each

Item No: DTALMH
Required: No
Description: NHP DIN-T LOCKDIN MCB Kit for DTMH 1P-4P

Item No: DTALPF
Required: No
Description: NHP DIN-T Accessory Pole Filler to suit 63mm 3P Strip 54mm 6x9mm Segments

Item No: DTATM100
Required: No
Description: NHP DIN-T Accessory 1 Pole Through Terminal 100A (MCB profile)

Item No: DTMHAUXAL
Required: No
Description: NHP DIN-T Accessory Auxiliary with Alarm or Auxiliary Function suits DTMH

Item No: DTMHLD
Required: No
Description: NHP DIN-T Accessory Locking Device Side Mount suits DTMH 6.5mm

RELATED PRODUCTS

ACCESSORY

Item No: DTMHLDNC

Required: No

Description: NHP DIN-T Accessory Locking Device Non Captive suits DTMH 4mm Yellow Qty 10

Item No: DTMHSHT220415

Required: No

Description: NHP DIN-T Accessory Shunt Trip 220 to 415V AC suits DTMH

Item No: DTMHSHT48130

Required: No

Description: NHP DIN-T Accessory Shunt Trip 48 to 130V AC suits DTMH

Item No: DTMHSRD

Required: No

Description: NHP DIN-T Accessory Terminal Shroud IP20 suits DTMH

Item No: DTPF12

Required: No

Description: NHP DIN-T Accessory Pole Filler 12Pole Strip 216mm equals 24 x 9mm Segments

Item No: DTTAX50PN

Required: No

Description: NHP DIN-T Accessory Terminal Axial Pin 50mm