RLB8004P

Socomec RLB Load Break Switch kit, w/ 230V AC Shunt and direct handle, 4P 800A

LOAD BREAK SWITCHES

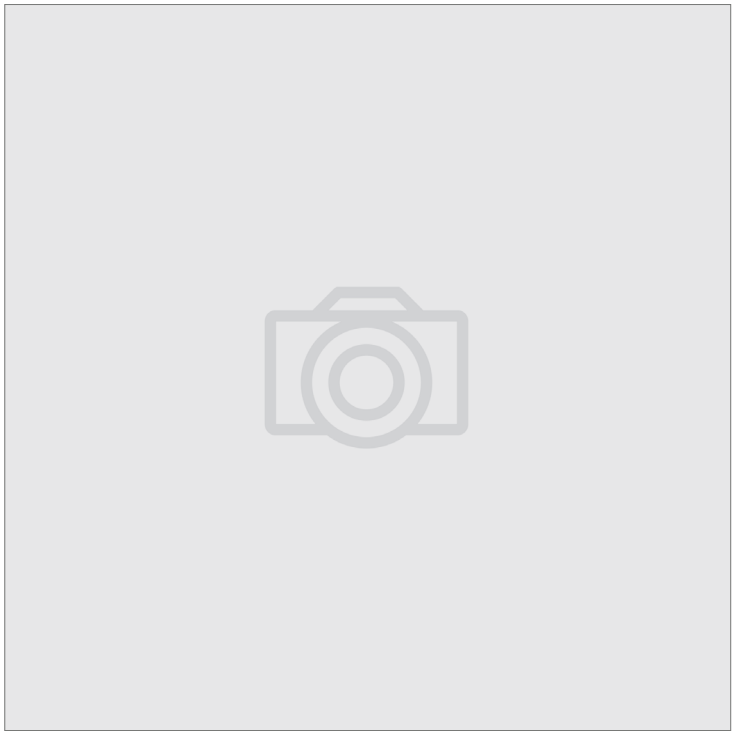

Component type	Switch disconnector
Range	RLB
Model	N/A
Alternative	NO ALTERNATIVE ITEM

The RLB series consisting of the smaller IDE and larger Sidermat range of remote trip load break switches are fully functional, remote breaking isolators with a range extending from 40A to 1800A. Protecting personnel against insulation faults via its special remote trip function, it can also offer protection against overloads when combined with suitable current transformers and thermal relays.

ELECTRICAL

Rated permanent current at AC-21, 400 V	800 A
Rated uninterrupted current Iu	800 A
Number of poles	4
Rated operation power at AC-23, 400 V	255 kW
Rated operation current Ie at AC-23a, 400 V	630 A
Rated operation current Ie at AC-23a, 500 V	630 A
Rated operation current Ie at AC-23a, 690 V	500 A
Rated short-time withstand current Icw	65 kA
Rated insulation voltage Ui	1000 V
Rated impulse withstand voltage Uimp	12 kV
Rated operating voltage	230 V
Number of auxiliary contacts as normally closed contact	0
Number of auxiliary contacts as normally open contact	0
Number of auxiliary contacts as change-over contact	0
Motor drive optional	No
Motor drive integrated	No

CONSTRUCTION

Degree of protection (IP), front side	IP65
Version as reversing switch	No
Number of switches	1
Suitable for front mounting 4-hole	Yes
Suitable for front mounting centre	No
Suitable for distribution board installation	Yes
Suitable for intermediate mounting	No
Interlockable	No

RLB8004P

Socomec RLB Load Break Switch kit, w/ 230V AC Shunt and direct handle, 4P 800A

LOAD BREAK SWITCHES

MECHANICAL	Padlock locking	Yes
DIMENSIONS	Height	320 mm
	Width	426 mm
	Depth	262 mm
	Conductor cross section solid (solid, stranded)	185-300 mm²
	Connectable conductor cross section	185300 mm²

DIMENSIONAL DIAGRAM

SIDERMAT 250 to 800 A

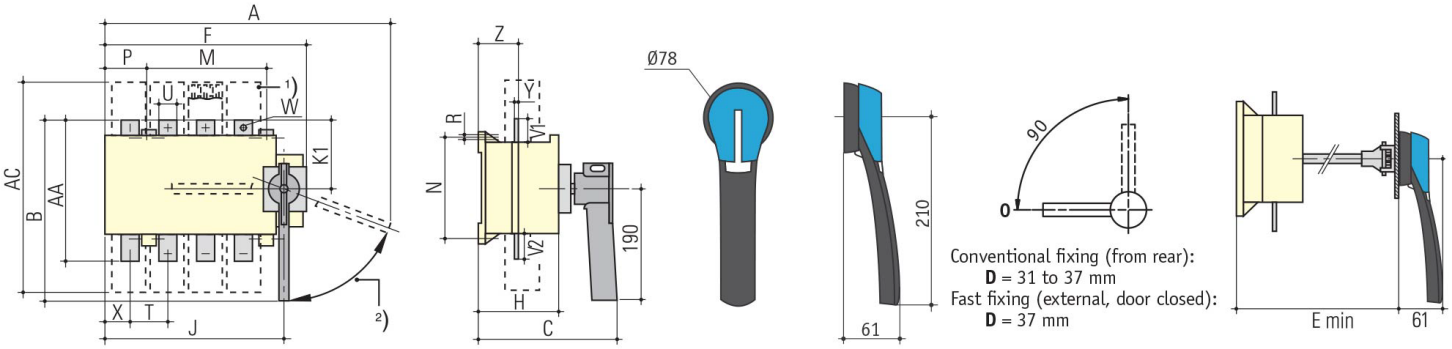

Rating (A)	Overall dimensions A 3p	A 4p	B	C	Terminal E	AC	Switch body F 3p	F 4p	H	J 3p	J 4p	K1	M	Switch mounting N	P 3p	P 4p	R	T	U	V1	V2	W	X 3p	X 4p	Y	Z	AA
250	435	495	309	248	275	388	285	345	148	253	313	115	210	180	10	70	7	65	32	35	43	11	31	46	3	67	238
400	435	495	309	248	275	388	285	345	148	253	313	115	210	180	10	70	7	65	32	35	43	13	31	46	5	69	238
630	435	495	318.5	248	275	388	285	345	148	253	313	129	210	180	10	70	7	65	45	49	49	13	31	46	8	72	257
800	491	570	350	262	296	470	346	426	178	308	388	160	250	250	20	100	9	80	50	60	60	15	36	65	7	72	320

Published on 24 July 2026