PIB01CD4810A

Carlo Gavazzi Monitoring Relay Over or Under Current vialnt-Shunt 1-10A AC DC and 24 and 48VACDC 1CO

MONITORING RELAYS

Component type	Current monitoring relay
Range	V/I/PH/PF Monitoring
Model	N/A
Product status	Existing

The Carlo Gavazzi range of monitoring relays are designed for the detection of phase loss and incorrect phase sequence to over/under current and voltage. Suitable for use in a wide range of applications that require protection against people, fire, earth current leakage, or incorrect mains or cable connections. Installation is easy with front dials and DIP switches.

ELECTRICAL	**Current measuring range**	1-10 A
	External current transformer	Yes
	Single-phase under current possible	Yes
	Single-phase over current possible	Yes
	Rated frequency	45-65 Hz
	Contains function DC-voltage under current	Yes
	Contains function DC-voltage over current	Yes
	Number of contacts as change-over contact	1
	Rated operation current Ie	8 A
	Rated operation current Ie at AC-15, 230 V	2.5 A
	Rated operation current Ie at DC-12, 24 V	5 A
	Rated operation current Ie at DC-13, 24 V	2.5 A
	Voltage type for actuating	AC/DC
	Rated control supply voltage Us at AC 50HZ	24-48 V
	Rated control supply voltage Us at DC	24-48 V
	Rated control supply voltage Us at AC 60HZ	24-48 V
	Over voltage category	III
	Type of electric connection	Plug-in connection
	Single-phase hysteresis possible	Yes
	Min. adjustable delay-on energization time	1 s
	Max. permitted delay-on energization time	6 s
CONSTRUCTION	**Material contact**	Silver tin-oxide
	Suitable for plug-in socket mounting	Yes
	IP rating	IP20
DIMENSIONS	**Height**	80 mm
	Width	36 mm

Published on 12 May 2026

PIB01CD4810A

Carlo Gavazzi Monitoring Relay Over or Under Current vialnt-Shunt 1-10A AC DC and 24 and 48VACDC 1CO

MONITORING RELAYS

DIMENSIONS	Depth	94 mm
	Weight	0.15 kg
ENVIRONMENT	Storage temperature	-30…80 °C

DIMENSIONAL DIAGRAM

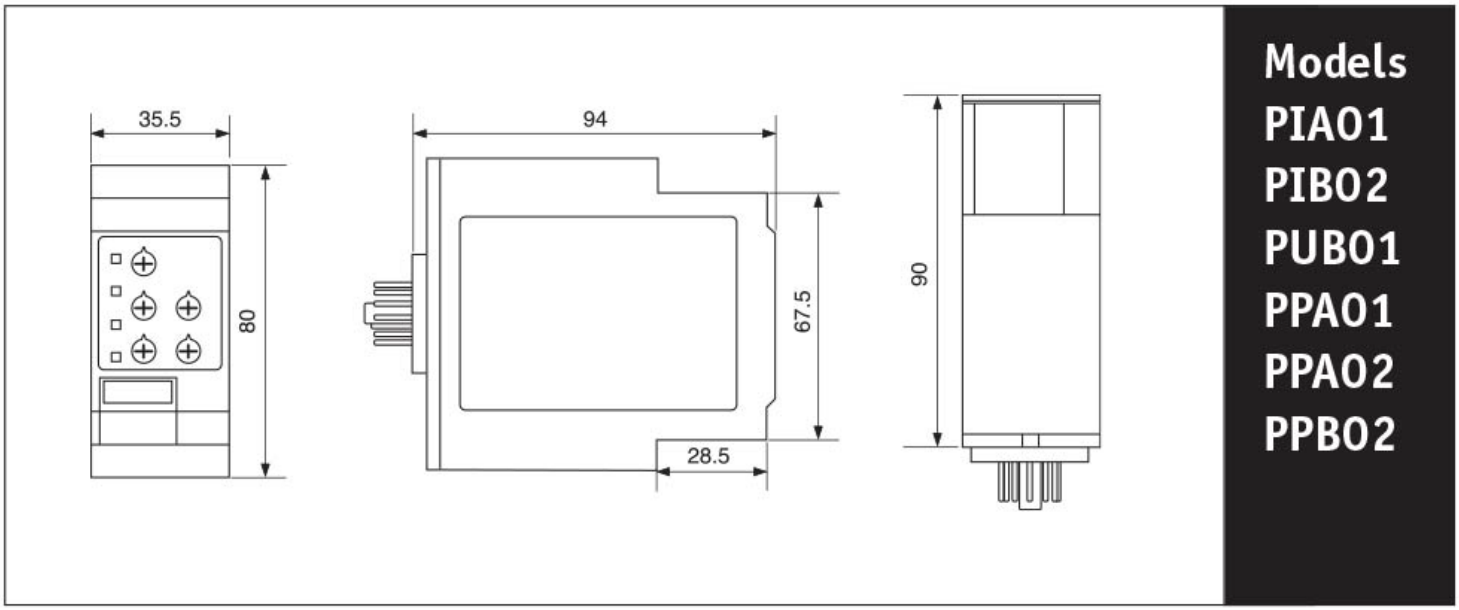

Published on 12 May 2026