PD30CNB15NPM5RT

Carlo Gavazzi Photoelectric Sensor Diffuse Reflective Back Suppresion NPN NO NC M8 Range-.15m 5m

NON-CONTACT SENSORS

Component type	Light scanner with background masking
Range	Photoelectric Sensor
Model	N/A
Alternative	CALL FOR ALTERNATIVE

The Carlo Gavazzi Photoelectric Sensors are ideal for long distance sensing or if the item is non-metal. Designed for harsh environments and for applications such as material handling, packaging machinery and automatic door systems. Fitting the requirements of virtually any application including diffuse-reflective, background suppression, retro-reflective, for transparent objects and through-beam.

ELECTRICAL	**Setting procedure**	Manual adjustment
	Voltage type	DC
	Rated control supply voltage Us at DC	18-30 V
	Type of switch function	Change-over contact (NO/NC)
	Type of switching output	NPN
	Switching frequency	1000 Hz
	Type of electric connection	Connector M8
	Max. output current	100 mA
CONSTRUCTION	**Material of optical surface**	Plastic
	Material housing	Plastic
	Construction type housing	Cuboid
	IP rating	IP67
	Suitable for safety functions	No
MECHANICAL	**With time function**	No
PHOTOMETRIC	**Sensing type**	Background suppression
	Type of light	Laser diode, red light
	Wavelength of the sensor	660 nm
	Max. switching distance	150 mm
DIMENSIONS	**Width sensor**	10 mm
	Height of sensor	30 mm
ENVIRONMENT	**Ambient temperature**	-25…55 °C

PD30CNB15NPM5RT

Carlo Gavazzi Photoelectric Sensor Diffuse Reflective Back Suppresion NPN NO NC M8 Range-.15m 5m

NON-CONTACT SENSORS

DIMENSIONAL DIAGRAM

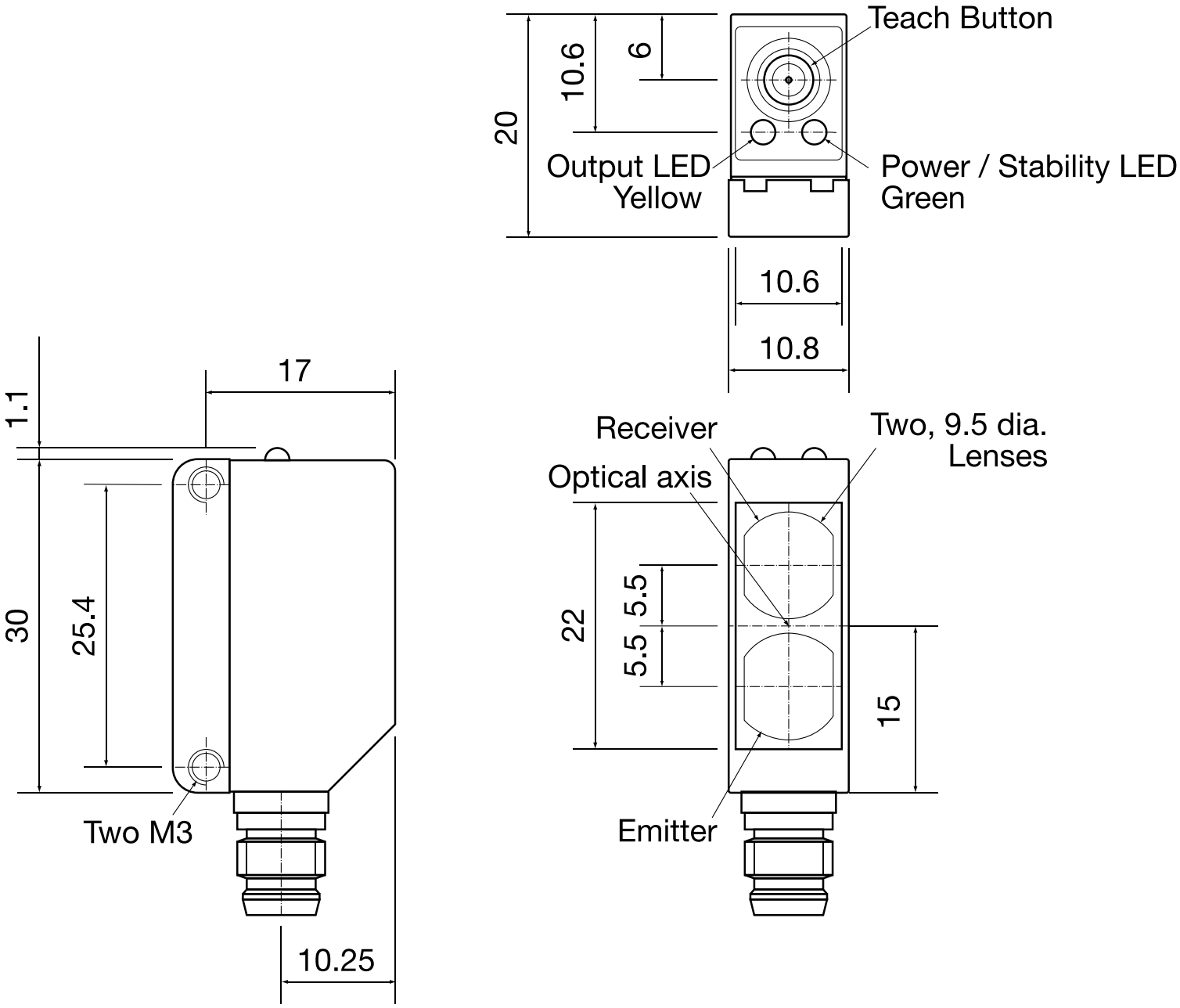

Published on 15 July 2026