PC191913G

Fibox SOLID Terminal Box PC IP66 and IP67 H190 x W190 x D130mm Grey

TERMINAL BOXES

NHP FIBOX



Component type	Enclosure/cabinet (empty)
Range	Solid PC
Model	N/A
Product status	Existing

The Fibox SOLID range is durable and versatile. The wide range of sizes and ease of customisation offer flexibility. Polycarbonate offers high UV resistance, which is important in outdoor applications.

ELECTRICAL	EMC-version	No
CONSTRUCTION	Material	Plastic
	Material quality	Polycarbonate (PC)
	Surface finishing	Untreated
	Colour	Grey
	RAL-number	7035
	IP rating	IP67
	Type of lock	Other
	Material lock	Plastic
	Gland plate(s) included	No
MECHANICAL	With mounting plate	No
	Mounting plate depth-adjustable	No
	Floor standing wall model	No
	Suitable for wall mounting	Yes
	Connectable	No
	Number of doors	1
	Number of locks	0
	Suitable for wall built-in	No
	Pole fastening	No
	Suitable for metrical mounting	Yes
	Suitable for outdoor set-up	Yes
	Pitched roof	No
	With glazed door	No
	With ventilation door	No
	With backside door	No
	Impact strength	IK09

Published on 29 October 2026

PC191913G

Fibox SOLID Terminal Box PC IP66 and IP67 H190 x W190 x D130mm Grey

TERMINAL BOXES

FIBOX

DIMENSIONS	**Width**	188 mm
	Height	188 mm
	Depth	130 mm
	Weight	0.72 kg

DIMENSIONAL DIAGRAM

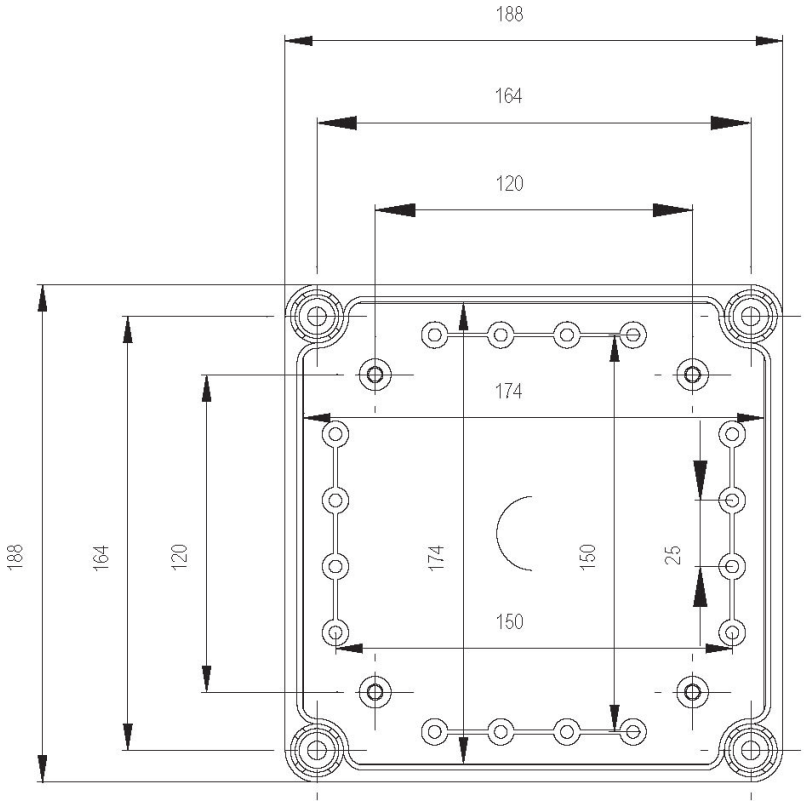

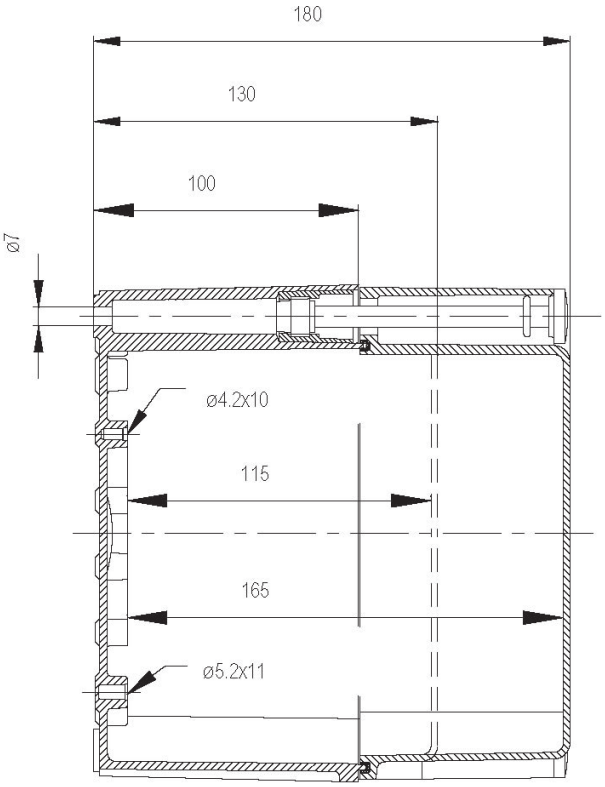

RELATED PRODUCTS

ACCESSORY



Item No: EKHVT

Required: No

Description: Fibox EK Mounting Plate Steel suits 190 x 190mm



Item No: EKHVTP

Required: No

Description: Fibox EK Mounting Plate Insulated suits 190 x 190mm



Item No: MB10674

Required: No

Description: Fibox Terminal Box Accessory Wall Fastening Lugs suits Fibox Qty 4

Published on 29 October 2026