TRA8128001A

IME TRA812 Split Core Current Transformer 800A/1A 120 x 80mm 7VA Class 1, 3VA Class 0.5

CURRENT TRANSFORMERS AND TRANSDUCERS

IME



Component type	Current transformer
Range	Split Core CT
Model	N/A
Product status	Existing

The IME split core current transformers (CT) are a highly accurate and excellent for a retrofit environment, with a broad range of primary current options and window sizes.

ELECTRICAL	**Primary rated current**	800 A
	Secondary current on CT	1 A
	Rated operating frequency	47-63 Hz
	Max. operating voltage (Umax)	0.72 V
	Rated short time thermal current Ith (x primary current)	48 kA
	Rated continuous thermal current Icth (x primary current)	48 kA
	Accuracy class	0.5
	Insulation class (IEC 61869-1, 61869-2)	B
	Security factor	15
	Rated burden, class 0.5	3 VA
	Rated burden, class 1	7 VA
	Power loss	10 W
	Secondary rated apparent power	3 VA
CONSTRUCTION	**Current transformer type**	Split core
	Model	Attachable current transformer
	With shock protection	Yes
	Snap mounting	Yes
	Secondary connection	Screw connection
	Number of primary inputs	1
ENVIRONMENT	**Storage temperature**	-40…85 °C

Published on 11 September 2026

TRA8128001A

IME TRA812 Split Core Current Transformer 800A/1A 120 x 80mm 7VA Class 1, 3VA Class 0.5

CURRENT TRANSFORMERS AND TRANSDUCERS

DIMENSIONAL DIAGRAM

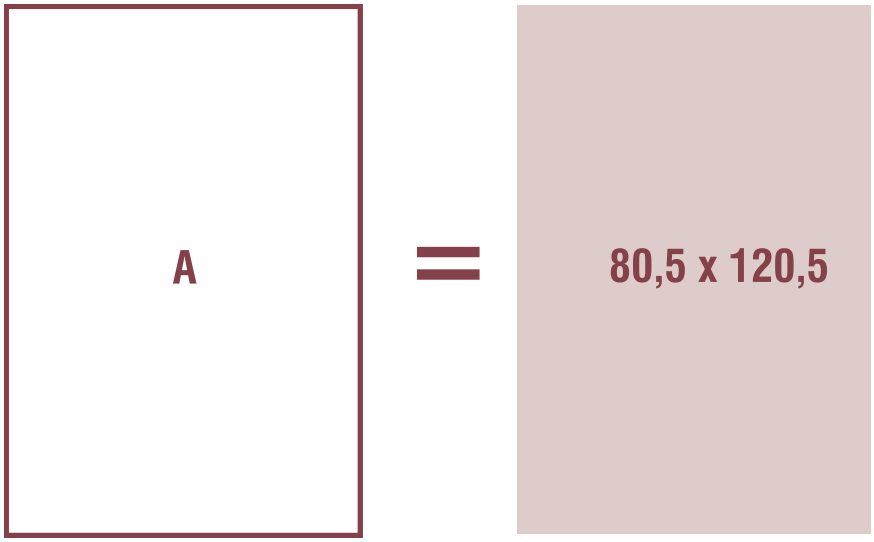

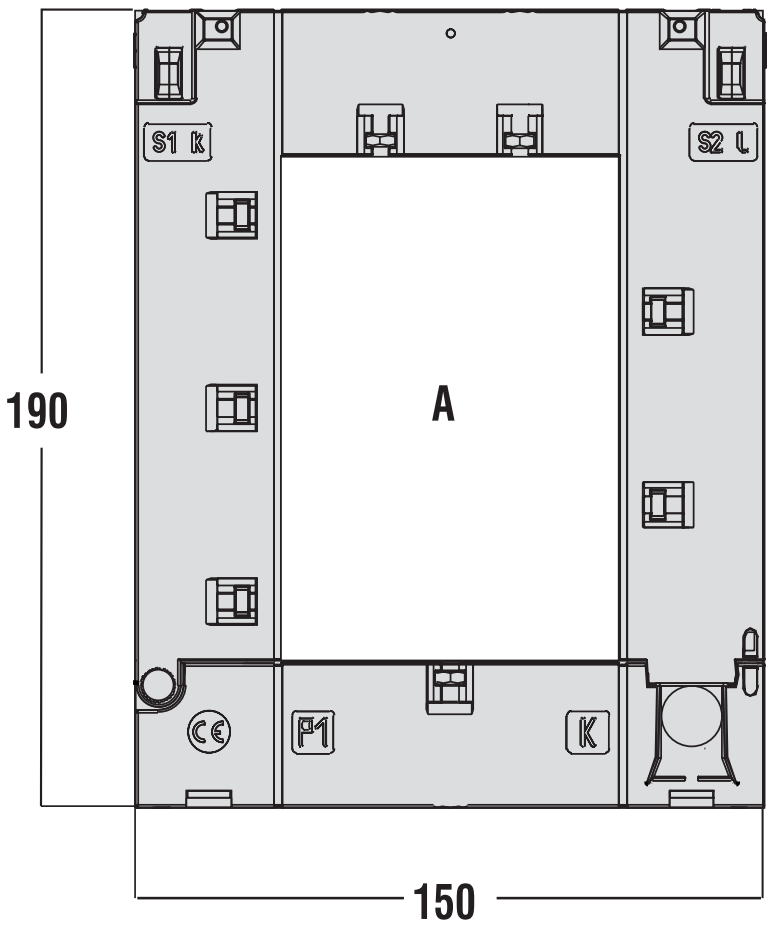

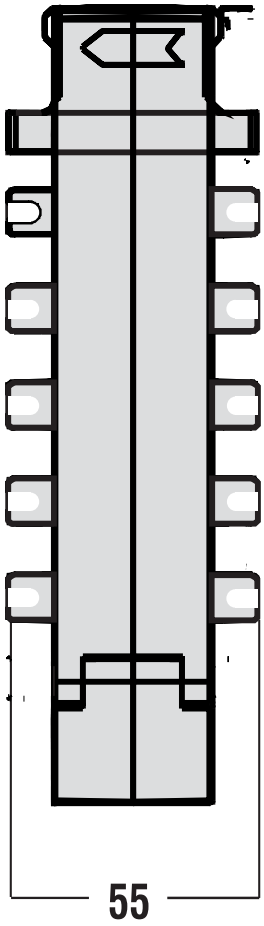

Published on 11 September 2026

TRA8128001A

IME TRA812 Split Core Current Transformer 800A/1A 120 x 80mm 7VA Class 1, 3VA Class 0.5

CURRENT TRANSFORMERS AND TRANSDUCERS

IME

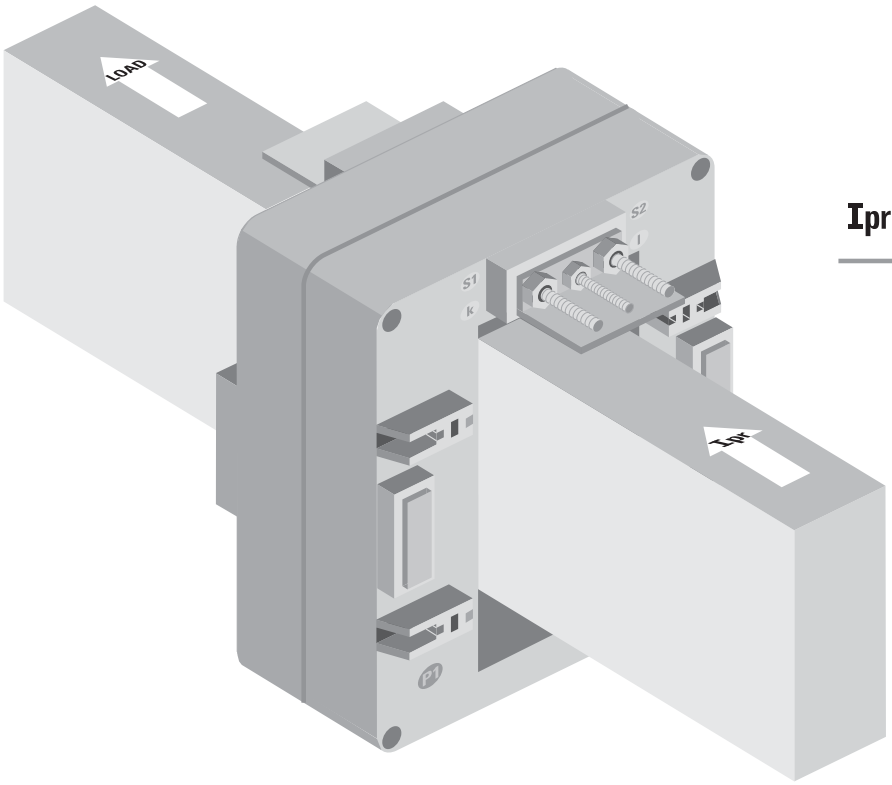

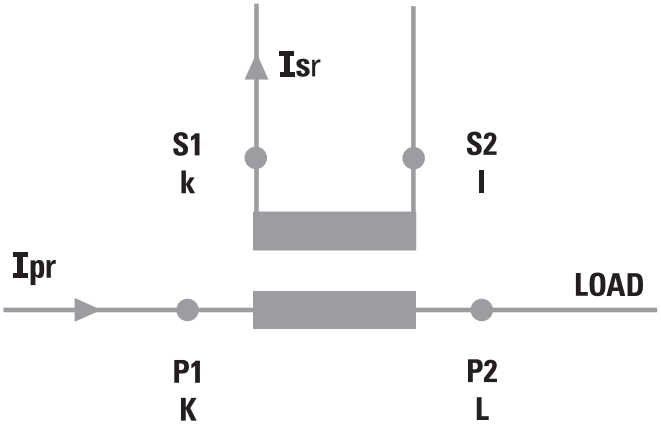

Published on 11 September 2026