TAS127BH16005A

IME TAS127 Solid Core Current Transformer Horizontal 1600A/5A 127 x 54mm 30VA Class 1 20VA Class 0.5

CURRENT TRANSFORMERS AND TRANSDUCERS



Component type	Current transformer
Range	Solid Core CT
Model	N/A
Product status	Existing

The IME solid core current transformers are highly accurate and cover a broad range of sizes and form factors that suit busbar, cable or protection class applications.

ELECTRICAL	**Primary rated current**	1600 A
	Secondary current on CT	5 A
	Rated operating frequency	47-63 Hz
	Max. operating voltage (Umax)	0.72 V
	Rated short time thermal current Ith (x primary current)	90 kA
	Rated continuous thermal current Icth (x primary current)	90 kA
	Accuracy class	0.5
	Insulation class (IEC 61869-1, 61869-2)	B
	Security factor	5
	Rated burden, class 0.5	20 VA
	Rated burden, class 1	30 VA
	Power loss	23 W
	Over current limiting factor	FS 5
	Secondary rated apparent power	20 VA
CONSTRUCTION	**Current transformer type**	Solid core
	Material housing	Polycarbonate (PC)
	Model	Attachable current transformer
	With shock protection	Yes
	Snap mounting	Yes
	Secondary connection	Screw connection
	Number of primary inputs	1
ENVIRONMENT	**Storage temperature**	-40…85 °C

Published on 11 September 2026

TAS127BH16005A

IME TAS127 Solid Core Current Transformer Horizontal 1600A/5A 127 x 54mm 30VA Class 1 20VA Class 0.5

CURRENT TRANSFORMERS AND TRANSDUCERS

DIMENSIONAL DIAGRAM

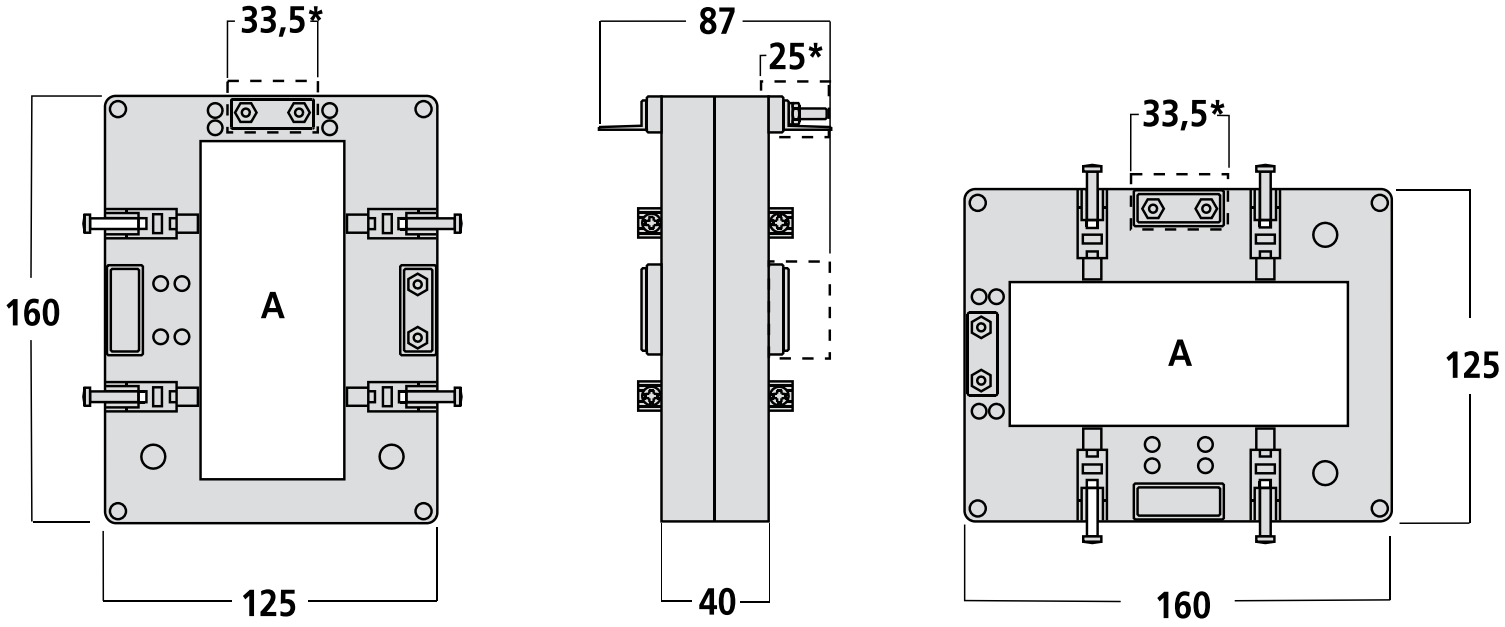

*Opzione/Option

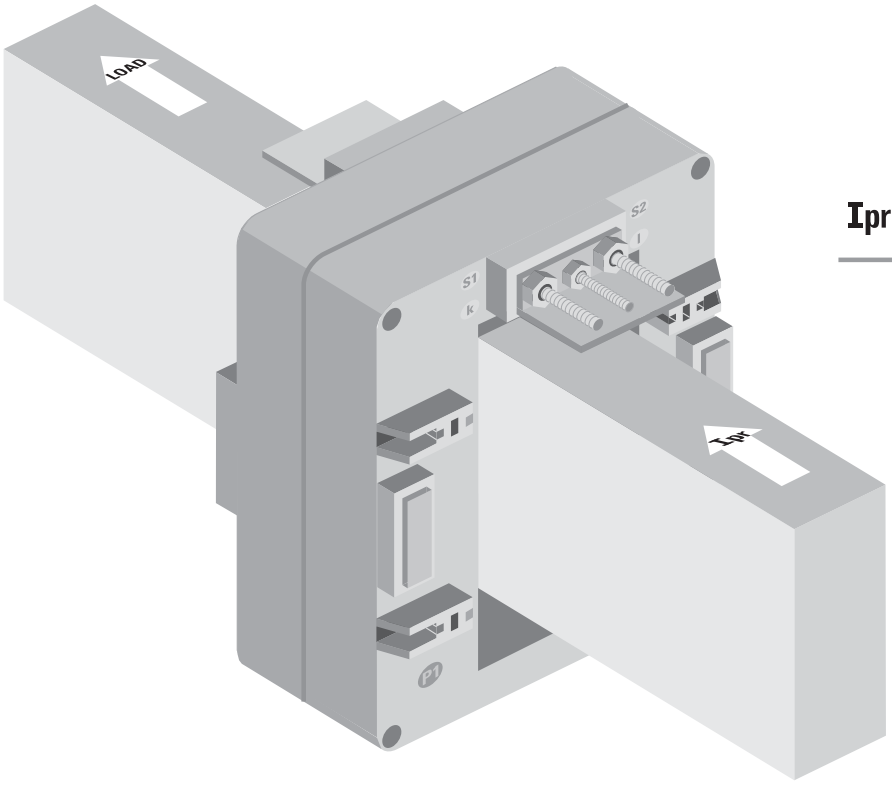

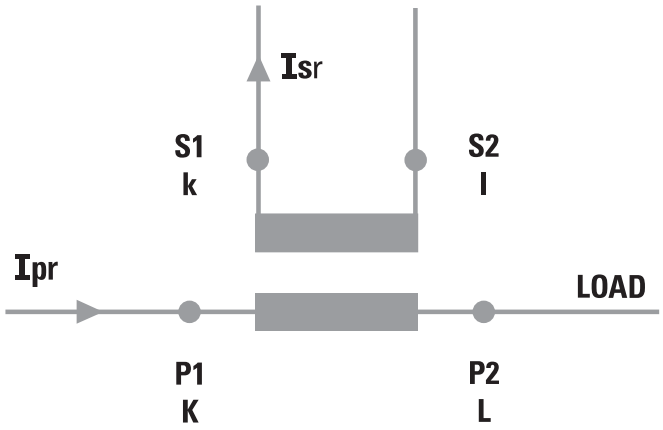

Published on 11 September 2026