SLBM323PS

Socomec SLBM Load Break Switch kit - Heavy Duty, Base/DIN mount, w/ External Handle S01, 3P 32A

LOAD BREAK SWITCHES

Component type	Switch disconnector
Range	SLBM
Model	N/A
Product status	Existing

The Socomec SLBM Modular Loadbreak Switches are manually operated, modular and multipolar by design. Providing a safe isolation solution for the distribution of electrical power in a range of applications requiring isolation up to 125A. Installation options include DIN rail, panel, or base mounting, they come with direct mount handle or a panel mount handle and shaft.

ELECTRICAL	**Rated permanent current at AC-21, 400 V**	32 A
	Rated uninterrupted current Iu	32 A
	Number of poles	3
	Rated operation power at AC-23, 400 V	32 kW
	Rated operation current Ie at AC-23a, 400 V	32 A
	Rated operation current Ie at AC-23a, 500 V	25 A
	Rated operation current Ie at AC-23a, 690 V	25 A
	Rated short-time withstand current Icw	2.5 kA
	Rated insulation voltage Ui	800 V
	Rated impulse withstand voltage Uimp	8 kV
	Type of control element	Door coupling rotary drive
	Rated permanent current at AC-23, 400 V	32 A
	Number of auxiliary contacts as normally closed contact	0
	Number of auxiliary contacts as normally open contact	0
	Number of auxiliary contacts as change-over contact	0
CONSTRUCTION	**Degree of protection (IP), front side**	IP65
	Version as main switch	Yes
	Version as reversing switch	No
	Number of switches	1
	Suitable for front mounting 4-hole	No
	Suitable for front mounting centre	No
	Suitable for distribution board installation	Yes
	Suitable for intermediate mounting	No
	Interlockable	Yes

Published on 24 July 2026

SLBM323PS

Socomec SLBM Load Break Switch kit - Heavy Duty, Base/DIN mount, w/ External Handle S01, 3P 32A

LOAD BREAK SWITCHES

MECHANICAL	Padlock locking	Yes
DIMENSIONS	Height	75 mm
	Width	45 mm
	Depth	75 mm
	Weight	0.16 kg
	Conductor cross section solid (solid, stranded)	1.5-16 mm²
	Connectable conductor cross section	1.5-16 mm²

DIMENSIONAL DIAGRAM

SIRCO M 16 to 80 A

Direct operation with handle

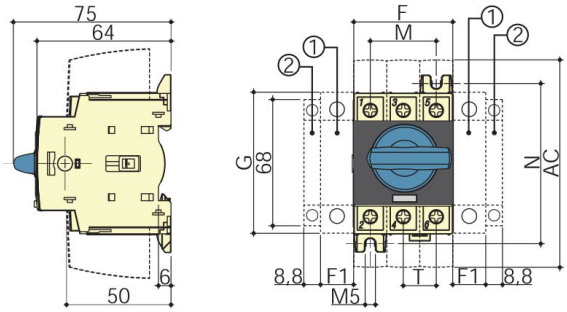

External front operation

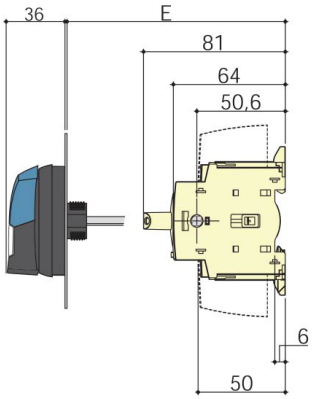

External side operation

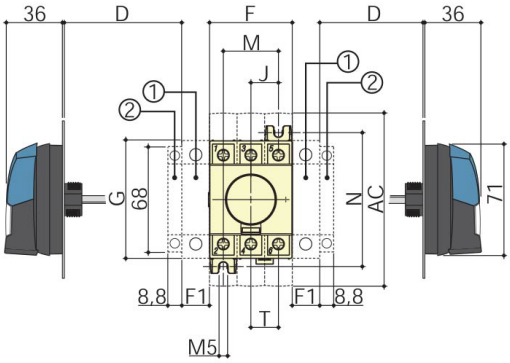

		Overall dimensions			Terminal shrouds		Switch body			Switch mounting		Connection terminals
Rating (A)	D min.	D max.	E min.	E max.	AC	F	F1	G	J	M	N	T
16...40	30	235	100	372	110	45	15	68	15	30	75	15
63...80	30	235	100	372	110	52.5	17.5	76	17.5	35	85	17.5

Published on 24 July 2026