HGK04701

STEGO Convection Heater 120 to 240V AC DC H60 x W25 x D50mm 20W

HEATERS

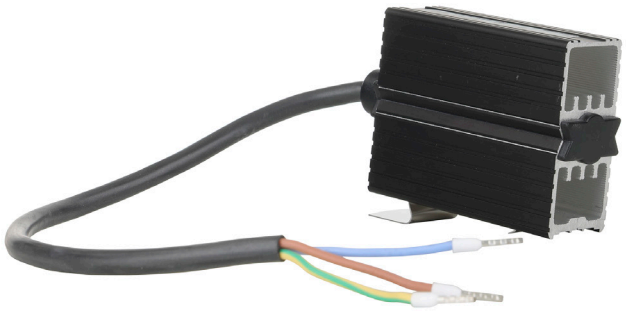

Component type	Heating (enclosure/cabinet)
Range	Semiconductor Heater
Model	N/A
Product status	Existing

The Stego heaters are available in a range of sizes, outputs and operating voltages, to effectively prevent condensation inside the enclosure in low ambient temperatures. Manufactured in Germany, they offer long life and a reliable operation.

ELECTRICAL	**Voltage type**	AC/DC
	Operating voltage at DC	120-240 V
	Operating voltage at AC 50 Hz	120-240 V
	Max. starting current	2.5 A
COMMUNICATION	**With room temperature controller**	No
CONSTRUCTION	**IP rating**	IP44
	Material	Aluminium
	Mounting method	DIN rail
MECHANICAL	**With fan**	No
DIMENSIONS	**Width**	25 mm
	Height	372 mm
	Depth	50 mm
ENVIRONMENT	**Operating temperature**	-45…70 °C

Published on 02 November 2026

HGK04701

STEGO Convection Heater 120 to 240V AC DC H60 x W25 x D50mm 20W

DIMENSIONAL DIAGRAM

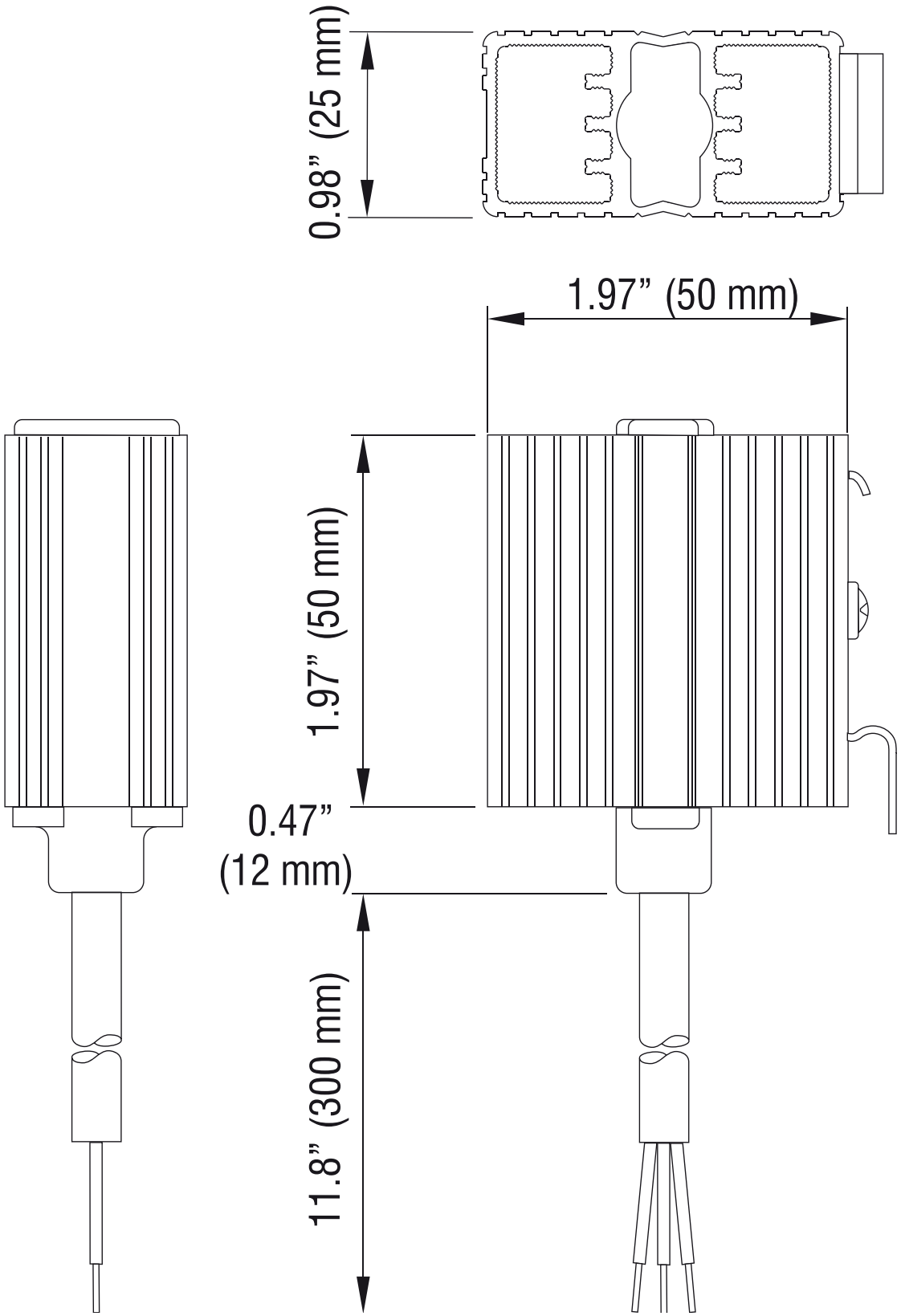

Published on 02 November 2026