HG14001

STEGO Convection Heater 120 to 240V AC DC H109 x W70 x D60mm 30W

HEATERS

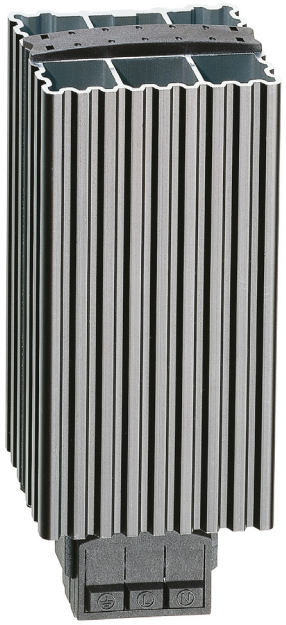

Component type	Heating (enclosure/cabinet)
Range	Semiconductor Heater
Model	N/A
Product status	Existing

The Stego heaters are available in a range of sizes, outputs and operating voltages, to effectively prevent condensation inside the enclosure in low ambient temperatures. Manufactured in Germany, they offer long life and a reliable operation.

ELECTRICAL	**Voltage type**	AC/DC
	Operating voltage at DC	120240 V
	Operating voltage at AC 50 Hz	120240 V
	Max. starting current	0.13 A
COMMUNICATION	**With room temperature controller**	No
CONSTRUCTION	**IP rating**	IP20
	Material	Aluminium
	Mounting method	DIN rail
MECHANICAL	**With fan**	No
DIMENSIONS	**Width**	70 mm
	Height	109 mm
	Depth	60 mm
ENVIRONMENT	**Operating temperature**	-45…70 °C

Published on 08 September 2026

HG14001

STEGO Convection Heater 120 to 240V AC DC H109 x W70 x D60mm 30W

HEATERS

DIMENSIONAL DIAGRAM

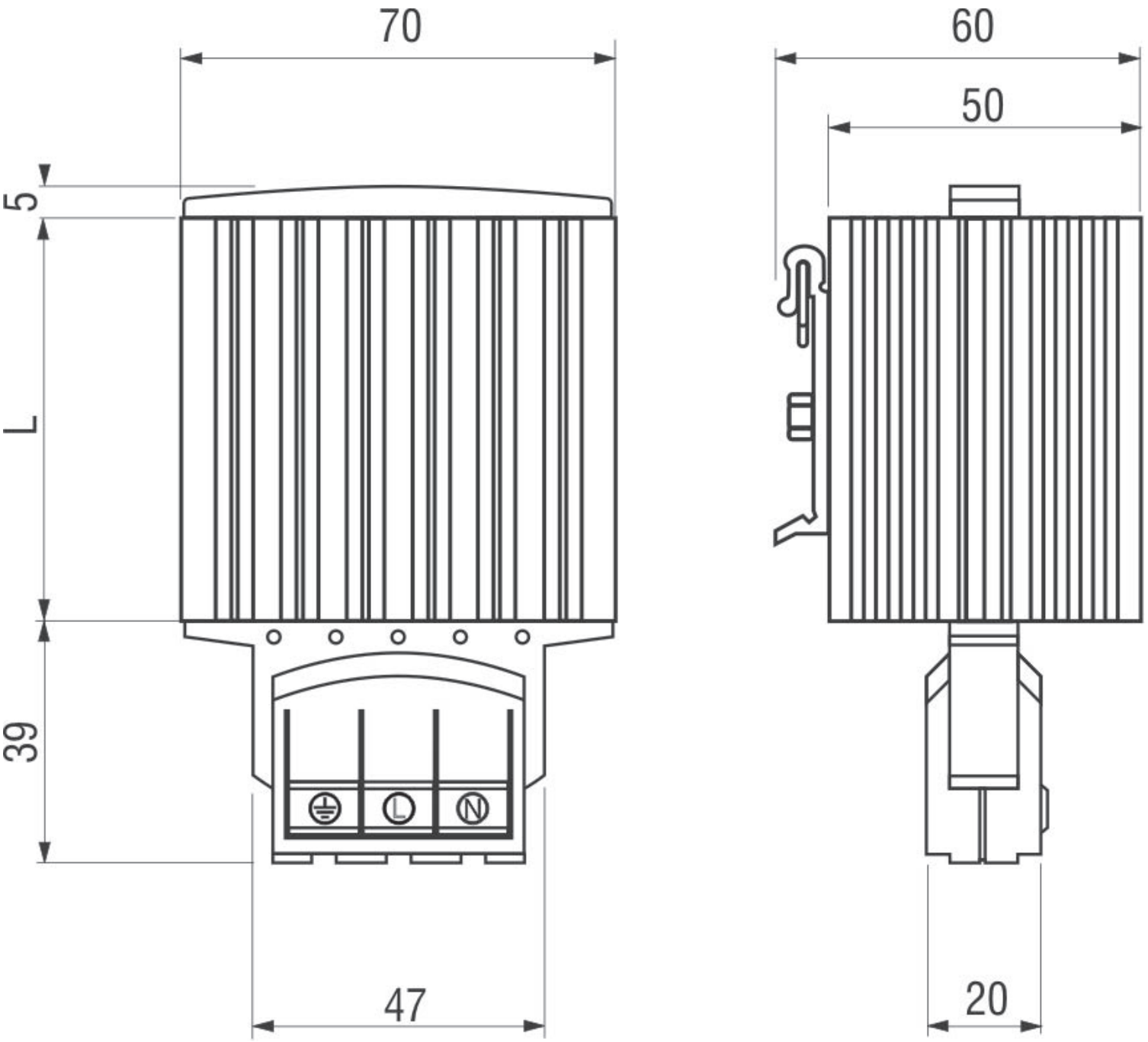

Published on 08 September 2026