HG14000

STEGO Convection Heater 120 to 240V AC DC H109 x W70 x D60mm 15W

HEATERS

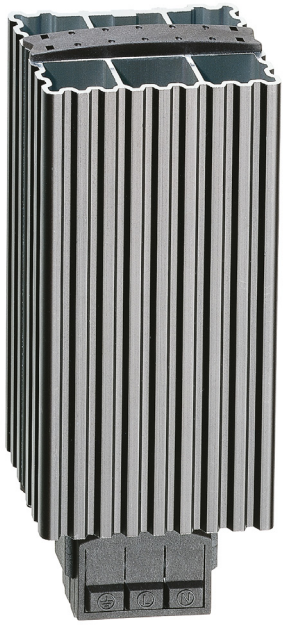

Component type	Heating (enclosure/cabinet)
Range	Semiconductor Heater
Model	N/A
Product status	Existing

The Stego heaters are available in a range of sizes, outputs and operating voltages, to effectively prevent condensation inside the enclosure in low ambient temperatures. Manufactured in Germany, they offer long life and a reliable operation.

ELECTRICAL	Voltage type	AC/DC
	Operating voltage at DC	120240 V
	Operating voltage at AC 50 Hz	120240 V
	Max. starting current	1.5 A
COMMUNICATION	With room temperature controller	No
CONSTRUCTION	IP rating	IP20
	Material	Aluminium
	Mounting method	DIN rail
MECHANICAL	With fan	No
DIMENSIONS	Width	70 mm
	Height	109 mm
	Depth	60 mm
ENVIRONMENT	Operating temperature	-45…70 °C

Published on 10 November 2026

HG14000

STEGO Convection Heater 120 to 240V AC DC H109 x W70 x D60mm 15W

HEATERS

DIMENSIONAL DIAGRAM

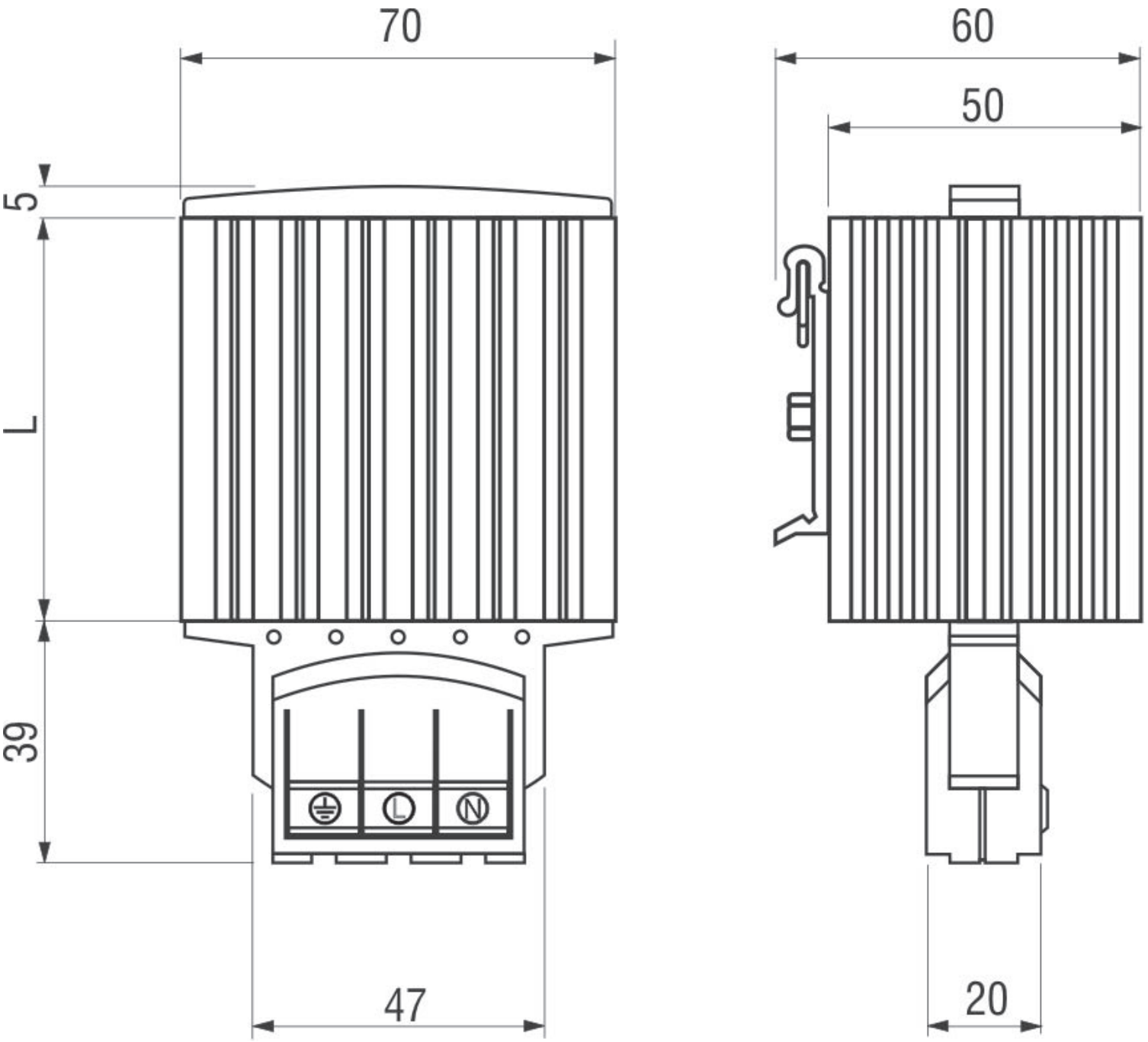

Published on 10 November 2026