DA28406

STEGO Pressure Compensation Device Plastic M12 IP66 and X9K Qty 2

PRESSURE AND DRAINAGE VALVES

Component type	Condensate drain (enclosure/cabinet)
Range	Pressure Compensation / Drainage
Model	N/A
Product status	Existing

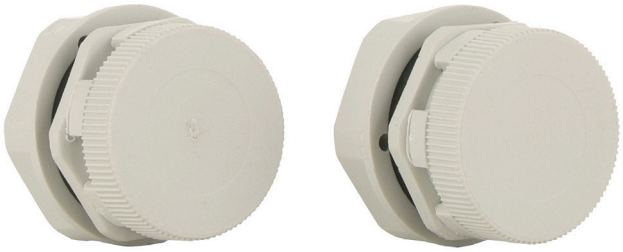

The Stego Pressure Compensation Devices are available in several sizes and materials and are fast and easy to install to achieve AS3000:2018 Clause 1.7.2 compliance. The one-way membrane allows moisture to escape the enclosure, while keeping liquid and dust out. Manufactured in Germany, they offer long service life with minimal maintenance.

CONSTRUCTION	**Air permeability**	120 l/h
	Material	Plastic
	IP rating	IP66/IP67/IP69K
	Colour	Light grey
MECHANICAL	**Thread size**	M12 x 1.5
	Nominal tightening torque	5 Nm
	Max. tightening torque	10 Nm
DIMENSIONS	**Diameter mounting hole**	12.1 mm
	Weight	0.04 kg
	Depth	15.8 mm
	Diameter drain	17 mm
ENVIRONMENT	**Operating temperature**	-35…70 °C
	Storage temperature	-35…70 °C
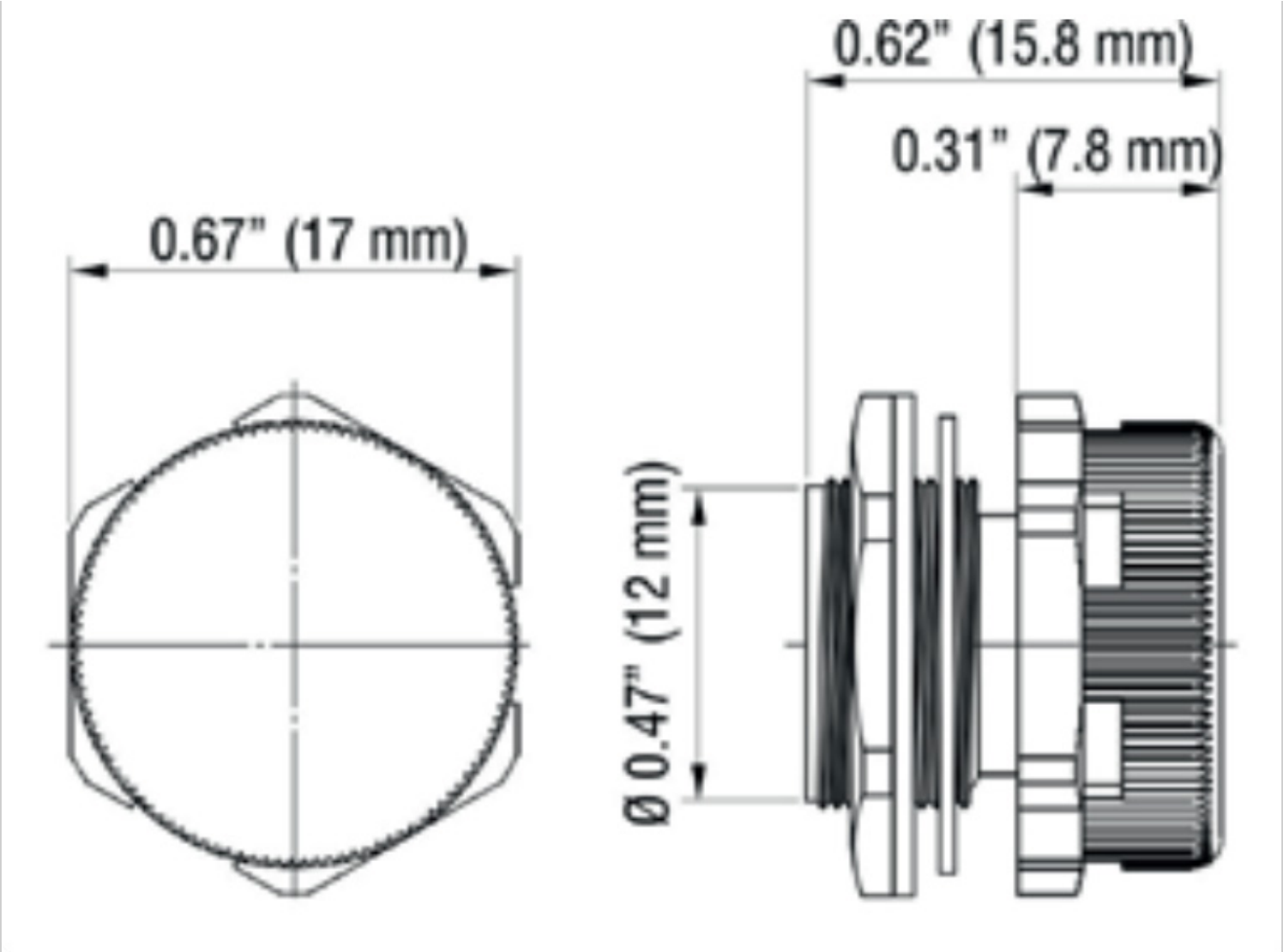
DIMENSIONAL DIAGRAM