800F1YM3

Allen-Bradley 800F Assembled Pls. Station 1 Hole Non Illum. Twist To Rel. 2 N.C. Yellow 22.5mm PB

PUSHBUTTON AND PILOT LIGHTS



Component type	Control circuit devices combination in enclosure
Range	800F E-Stop
Model	N/A
Product status	Existing

The Allen-Bradley 800F Emergency stop operators are a reliable and durable solution for emergency applications in industrial environments. Available in various actuator sizes, illuminated or non-illuminated with optional key operation and self-monitoring contact block. Suitable for mounting on 22.5mm holes in both thermoplastic and metal types, designed for demanding industrial environments.

CONSTRUCTION	Number of push buttons	1
	Number of key switches	1
	Number of selector switches	1
	Number of mushroom-shaped push-buttons	1
	Colour housing cover	Yellow
	Material housing	Plastic
MECHANICAL	Max. vibration acceleration	10 m/s²
	Max. vibration frequency, operational	2000 Hz
	Max. shock acceleration	100 g
ENVIRONMENT	Operating temperature	-25-70

Published on 20 October 2026

800F1YM3

Allen-Bradley 800F Assembled Pls. Station 1 Hole Non Illum. Twist To Rel. 2 N.C. Yellow 22.5mm PB

PUSHBUTTON AND PILOT LIGHTS

DIMENSIONAL DIAGRAM

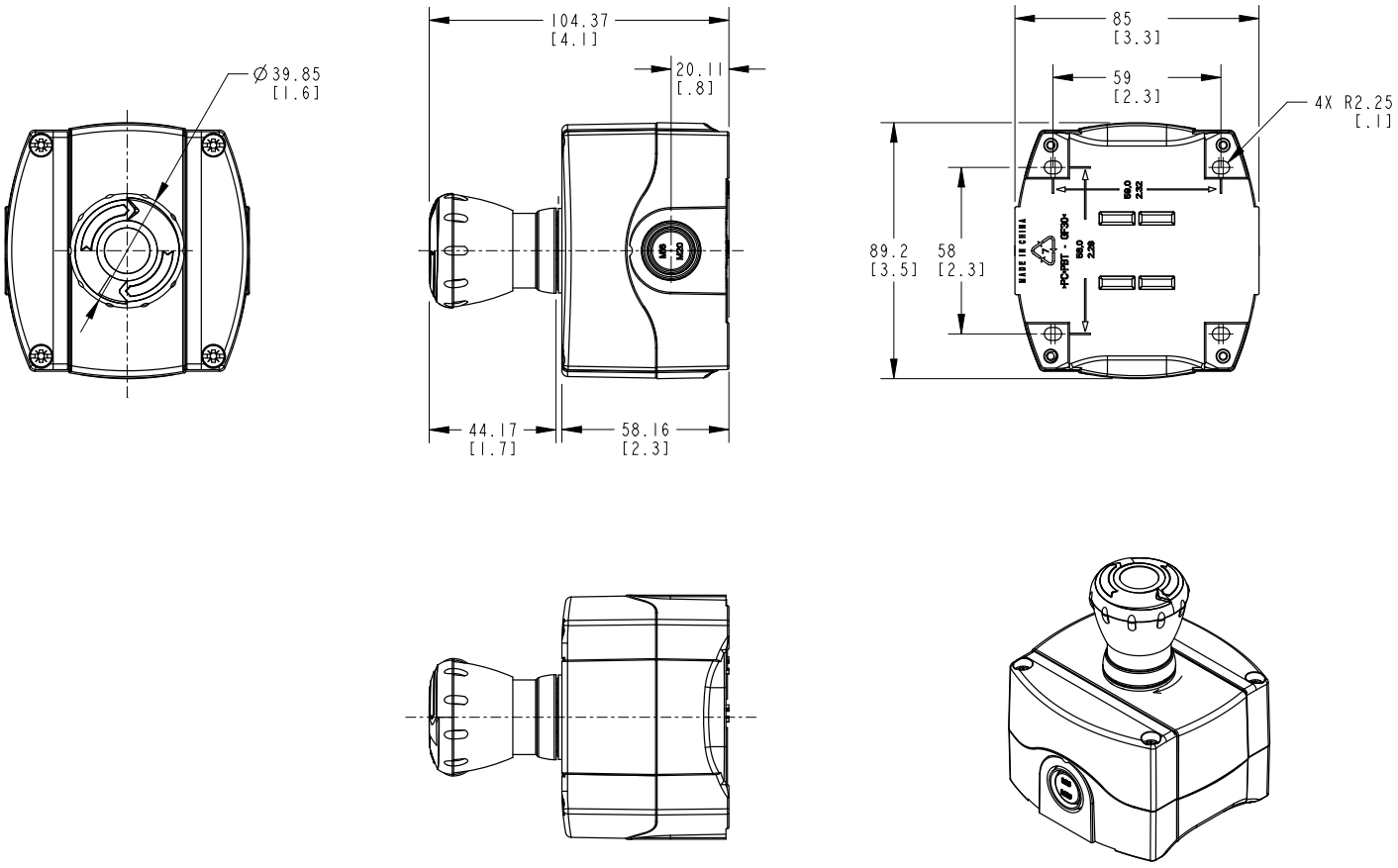

DIMENSIONS IN MILLIMETERS [INCHES].
DIMENSIONS ARE NOT INTENDED TO BE USED IN MANUFACTURING PURPOSES.

800F1YM3

Allen-Bradley 800F Assembled Pls. Station 1 Hole Non Illum. Twist To Rel. 2 N.C. Yellow 22.5mm PB

PUSHBUTTON AND PILOT LIGHTS

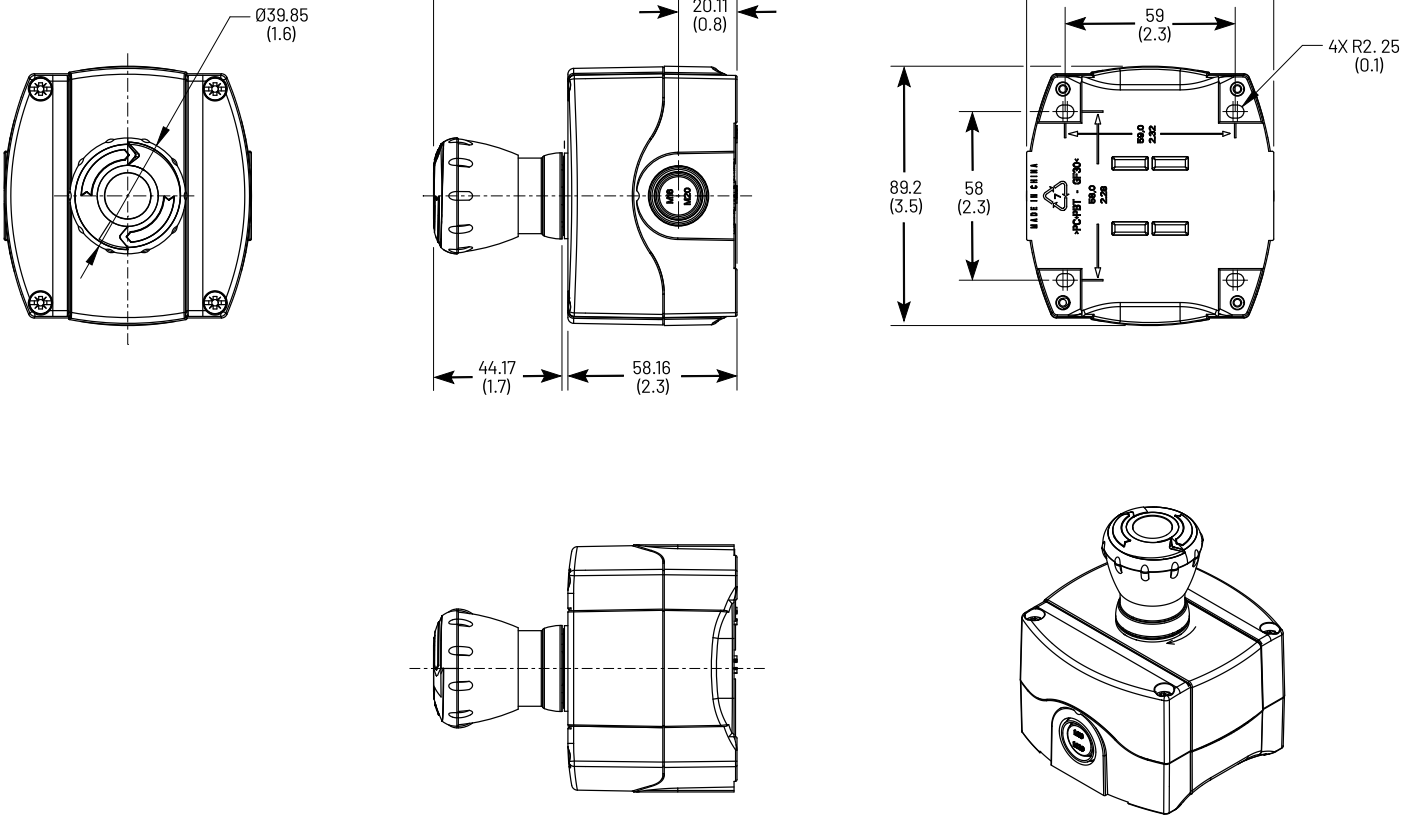

Dimensions are in millimeters (inches).

Published on 20 October 2026